SINGLE-ACCOMMODATION TOILET FACILITIES

CBC §1115B.3.2

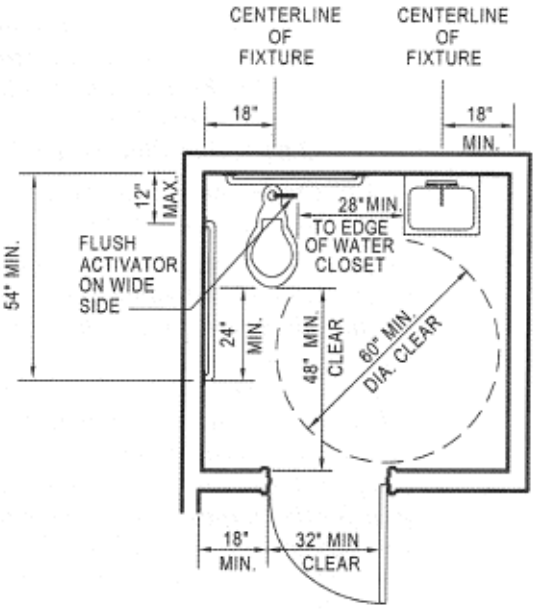

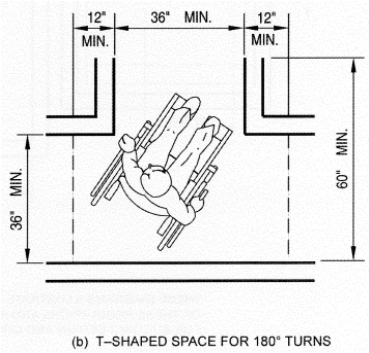

1. **There shall be sufficient space in the toilet room for a wheelchair measuring 30 inches wide by 48 inches long to enter the room and permit the door to close. There shall be in the room a clear floor space of at least 60 inches in diameter, or a T-shaped space. No door shall encroach into this space for more than 12 inches.**
2. **Doors shall not swing into the clear floor space required for any fixture.**
3. **Provide one accessible water closet in compliance with CBC§1115.4.1 (Accessible Water Closet Handout)**
4. **All doors, fixtures and controls shall be on an accessible route. The minimum clear width of an accessible route shall be 36 inches except at doors. If a person in a wheelchair must make a turn around an obstruction, the minimum clear width of the accessible route shall be as follows:**

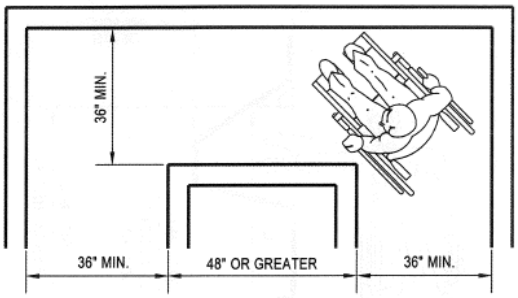

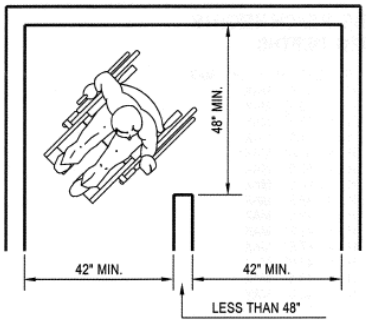

5. **In other than dwelling units, toilet room floors shall have a smooth, hard, nonabsorbent surface such as Portland cement, concrete, ceramic tile or other approved material which extends upward onto the walls at least 5 inches. Walls within water closet compartments and walls within 24 inches of the front and sides of urinals and toilets shall be similarly finished to a height of 48 inches and, except for structural elements, the materials used in such walls shall be of a type that is not adversely affected by moisture.**
6. **Provide one accessible lavatory in compliance with CBC§1115B.4.3. (Accessible Lavatory Handout)**
7. **The entrance door shall contain a privacy latch which complies with CBC§1117B.6 Controls and Operating Mechanisms.**